High capacity telehandlers

Regulatory area: EE

P72.10



MERLO

Gallery







Comfort: The best workplace

Exclusive comfort

An unprecedented design guarantees maximum functionality and comfort; grouping the information provided to the driver and the controls of the various systems and devices for optimal ergonomics. The reverse shuttle on the steering wheel is also present on the joystick.

Cab entry

To ensure simple and easy access to the cab, the door of Merlo telehandlers can be opened by up to 180°. In addition, the inside of the door is equipped with a large handrail to help the operator when getting inside and outside of the cab.

Air-conditioning

Developed according to automotive standards, cutting the warm-up and cool-down times in half compared to a conventional air conditioning system. The inlet vent is placed on the side of the cab, away from potential sources of dust and dirt, while inside there are 8 vents.

Efficiency: Simpler and smarter

Transmission

In order to ensure a reduction in consumption and operating costs, Merlo telescopic handlers boast full electronic management of the transmission and engine, in order to minimise RPM and, consequently, fuel demand.

Steering Modes

The axles ensure the maximum steering angle to perform manoeuvres in tight spaces. Additionally, the operator can manage the steering of the machine with three different options according to the specific needs of the job.

Visibility

Merlo's improved visibility increases range of movement and safety for operators.

Performance: Everything at your fingertips

Transmission

The Merlo telehandlers have excellent braking capacity when the accelerator pedal is released, guaranteeing high torque to the wheels during material handling and transfers, as well as millimetric precision of movements when positioning the load.

Engines

All models feature a combustion engine in an original Merlo mounting layout, developed by Merlo with the invention of the panoramic visibility models, ensuring maximum accessibility to components in case of programmed and/or extraordinary maintenance.

Axles

The exclusively designed axles are manufactured and developed in-house by Merlo, and can be equipped with differential lock to ensure traction on any terrain, regardless of how unstable.

Safety: Not just feelings

Active safety

In order to remain fully compliant with regulations in frontal tipping prevention, Merlo handlers are equipped with features developed specifically to keep the operator safe from frontal tipping, without sacrificing performance, particularly of boom speed and lifting capacity.

Aerial work platform

The Merlo telehandlers can be configured with aerial work platform. This solution, complying with EN280 standard, assures an increased level of active and passive safety during work at heights, and enhances machine versatility.

Certified cab

All Merlo telehandlers have a metal structure above the glass roof on the outside of the cab to comply fully with FOPS Level II standard, the most stringent certification level in protecting the operator from falling objects.

Hotspot



1 - 180° OPENING	A door that made history! Merlo is the only manufacturer to offer a door with 180° split opening. Standard on the entire range.
2 - ASCS	The ASCS safety system: the ideal assistant! The system adjusts the speed and maximum extent of the movements based on the attachments in use, the load being handled and its position, thus eliminating the risk of overturning. Standard on the entire range with LS hydraulic system.
3 - EPD ECO POWER DRIVE	Maximum savings and efficiency! The Merlo-patented EPD system electronically controls engine and transmission. It manages engine speed, hydrostatic pump flow rate, and hydrostatic drive displacement, maximising efficiency and reducing RPM, saving up to 18% in fuel consumption.
4 - IMPLEMENT RECOGNITION	Every implement has its own features. Thanks to the automatic implement recognition system, the ASCS adapts load chart and safety limits to guarantee maximum performance in total safety at all times. Standard on the entire range.

PERFORMANCE AND FEATURES	P72.10EE		
Performance			
Unladen weight (kg)	11150		
Maximum load capacity (kg)	7200		
Lift height (m)	9.55		
Maximum reach (m)	5.2		
Lift height at max. load capacity (m)	6.56		
Reach at max. load capacity (m)	2		
Load capacity at max. lift height (kg)	4000		
Load capacity at max. reach (kg)	2100		
Boom side-shift (mm)	+/- 250		
Frame levelling (%)	+/- 8		
Boom section	2		
Powertrain			
Engine	Perkins 904J		
Range/Cylinders (l)	3.6/4		
Engine power (kW/HP)	85.9/116.8		
Anti-pollution technology	Tier 3		
Reversible Fan	●		
Maximum speed (km/h)	40		
Fuel tank capacity (l)	140		
Hydrostatic transmission EPD	●		
Electronic joystick	●		
Axles	Drop portal		
Reducers	RR 700		
Brakes	Dry discs		
Automatic parking brake	●		
Hydraulic			
Hydraulic pump	LS		
Delivery / pressure (bar-l/min)	108 - 250		
Hydraulic oil tank capacity (l)	100		
Auxiliary hydraulic service on boom	●		
Rear service line	○		
Cab			
Cab finishing	Standard		
ASCS	Full		
FOPS Cab	●		
ROPS Cab	●		
Controls	Electronic joystick control		
Tilting cab	–		
Double reverse shuttle	Dual reverse		
Configuration			
Hydropneumatic Suspension CS Merlo	–		
Hydropneumatic Suspension BSS Merlo	–		
Hydropneumatic Suspension EAS Merlo	–		
Work lights on cab	○		
Sun-shade in the cab	○		
Tac-lock	●		
Pre-arrangement for aerial work platform	○		
Two floating forks	●		
Pedal Inching-Control	●		
Permanent four-wheel drive	●		
All wheel steering	●		
Three steering way	●		
Standard tyres	400/70-24"		
OPT tyres	445/65-22,5"; 18-22,5"		
Hydraulically controlled stabilizers	–		
Turret rotation	–		
Tractor type approval	–		
PNEUMATIC braking	–		
HYDRAULIC braking	–		
PTO	–		
3-point rear linkage	–		

– not available
● standard
○ optional

Dimensions

	P72.10EE
A - Length	5480
C - Wheelbase (mm)	2920
F - Ground clearence	450
H - Width	2240
M - Cab width (mm)	1010
P - Height	2500
R - Wheel turning radius (mm)	3970
S - Fork steering range (mm)	4990

Technical Details

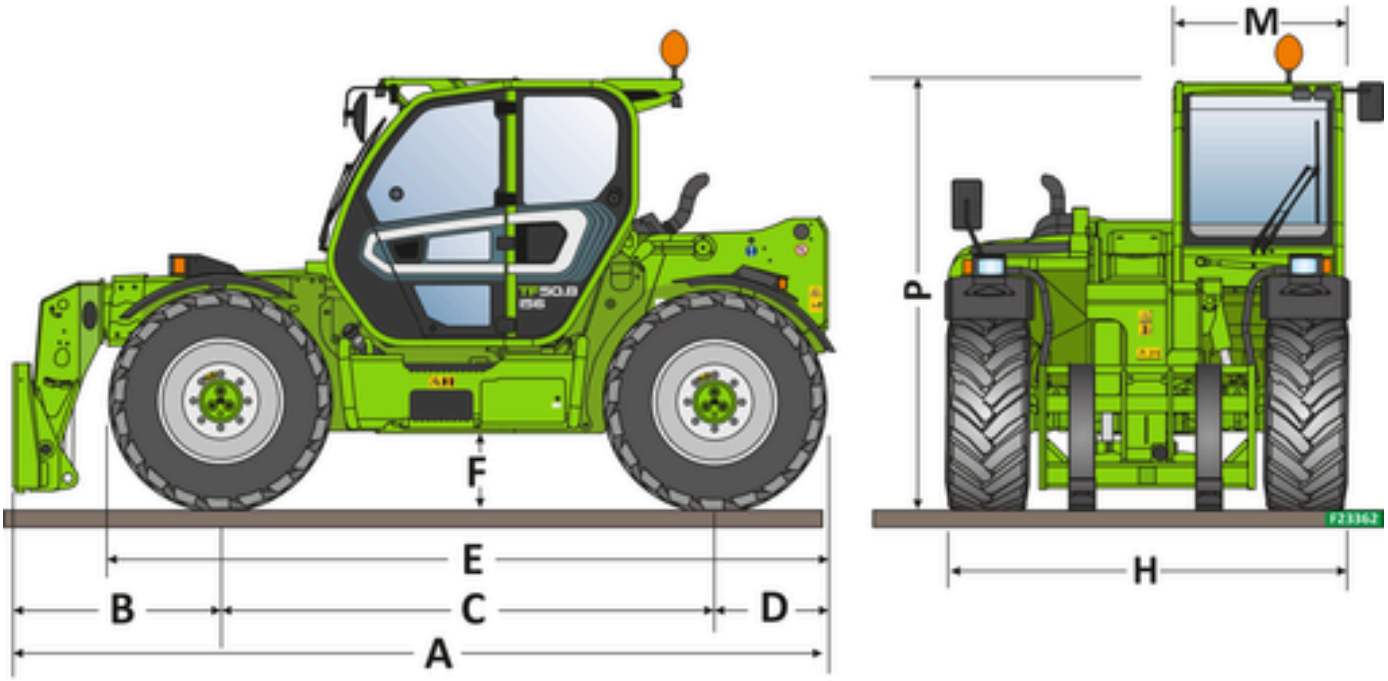

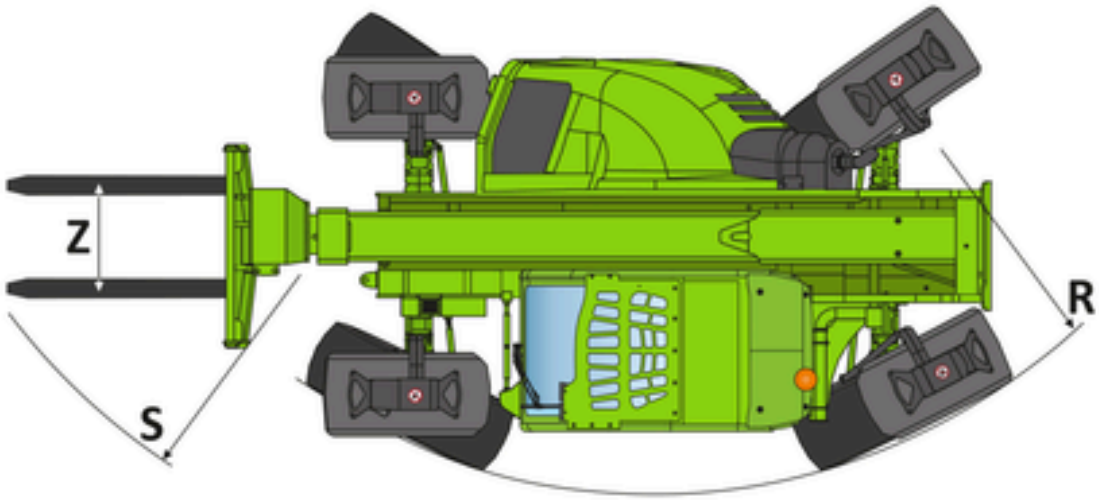

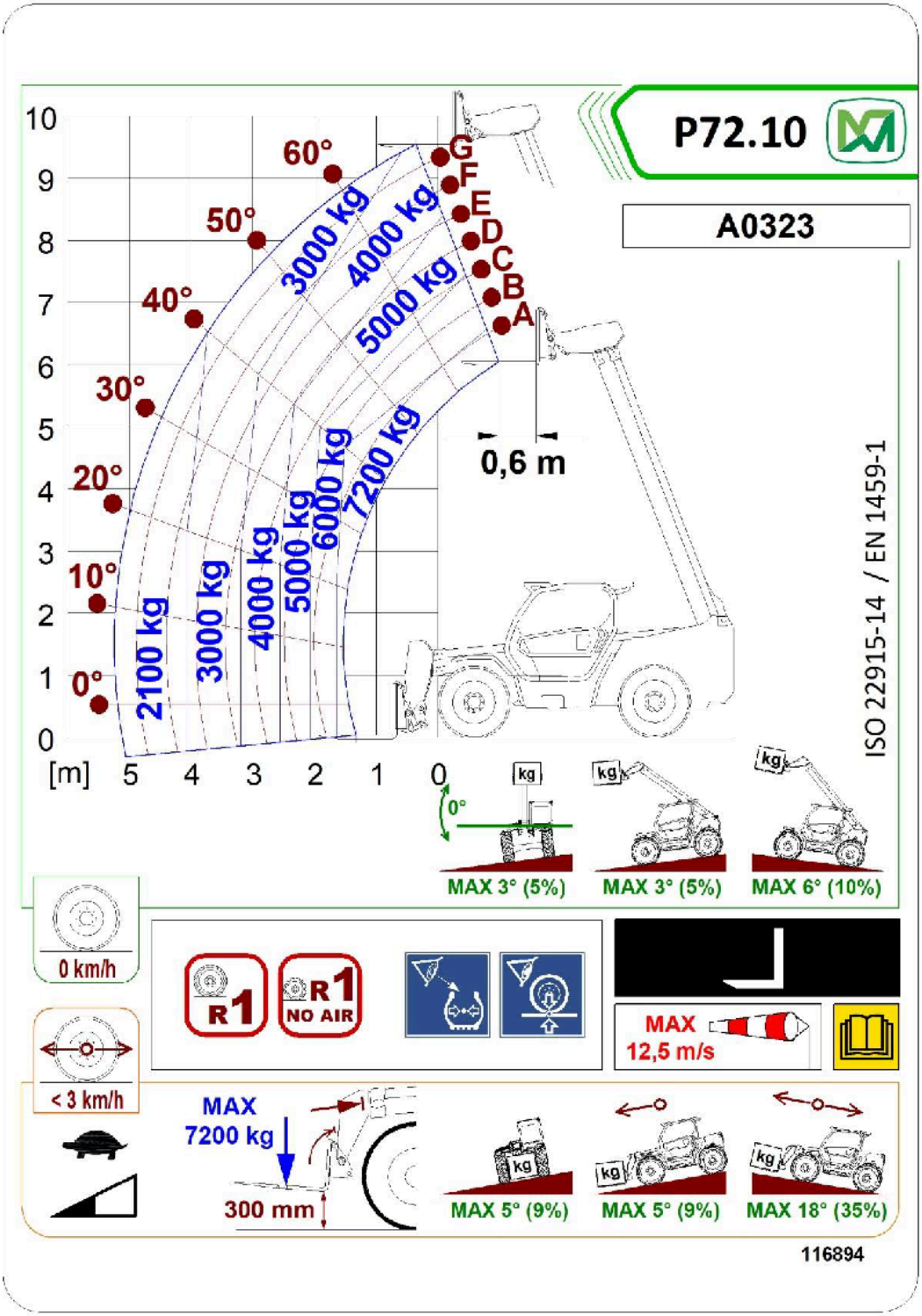
P72.10
A0323
ISO 22915-14 / EN 1459-1
10
9
8
7
6
5
4
3
2
1
0
[m] 5 4 3 2 1 0
60°
50°
40°
30°
20°
10°
0°
G
F
E
D
C
B
A
3000 kg
4000 kg
5000 kg
2100 kg
3000 kg
4000 kg
5000 kg
6000 kg
7200 kg
0,6 m
kg
0°
MAX 3° (5%)
MAX 3° (5%)
MAX 6° (10%)
0 km/h
R1
R1
NO AIR
MAX
12,5 m/s
< 3 km/h
MAX
7200 kg
300 mm
MAX 5° (9%)
MAX 5° (9%)
MAX 18° (35%)
116894

Your Merlo dealer

MERLO S.P.A.
Via Nazionale, 9
12010 S. Defendente di Cervasca,
(Cuneo) Italia
Tel. +39 0171 614111

info@merlo.com
www.merlo.com